# HFS5 SOLID STATE RELAY

File No.: CQC02001001943

## Features

- 2500V dielectric strength
- 600V blocking voltage
- Photo isolation
- Zero cross or random turn-on
- Printed circuit board mount
- Environmental friendly product (RoHS compliant)

## INPUT (TA = 25˚C)

| | | |
|---|---|---|
| Control voltage range | 05D | 4 to 6VDC |
| | 12D | 9.6 to 14.4VDC |
| | 24D | 19.2 to 28.8VDC |
| Must operate voltage | 05D | 4VDC |
| | 12D | 9.6VDC |
| | 24D | 19.2VDC |
| Must release voltage | | 1.0VDC |
| Max. input current | | 15mA |

## OUTPUT (TA = 25˚C)

| | | |
|---|---|---|
| Load voltage range | | 75 to 280VAC |
| Load current range | | 0.1 to 2A |
| Max. surge current (10ms) | | 25Apk |
| Max. $I^2$ t for fusing (10ms, $A^2$ s) | | 3.1 |
| Max. leakage current | | 1.5mA |
| Max. on-state voltage drop | | 1.5Vrms |
| Max. turn-on time | Zero cross turn-on | 1/2cycle + 1ms |
| | Random turn-on | 1ms |
| Max. turn-off time | | 1/2cycle + 1ms |
| Max. transient overvoltage | | 600Vpk |
| Min. off-state dv/dt | | 100V/μs |
| Max. zero cross overvoltage | | ±15V |
| Min. power factor | | 0.5 |

## GENERAL (TA = 25˚C)

| | | |
|---|---|---|
| Dielectric strength ( input to output ) | | 2500VAC, 50 / 60Hz,1min |
| Insulation resistance | | 1000MΩ (at 500VDC) |
| Max. capacitance ( input to output ) | | 5pF |
| Vibration resistance | | 10 to 55 HZ 1.5mm DA |
| Shock resistance | | 980m/s² |
| Ambient temperature | Operating | -30˚C to 85˚C |
| | Storage | -30˚C to 100˚C |
| Ambient humidity | | 45% to 85% RH |
| Unit weight | | Approx. 6g |

## DESCRIPTION

This SPST-NO printed circuit board mount SIP SSR provides AC output switching in a high density package.The HFS5's DC input is compatible with 5, 12 and 24V logic systems.The relay provides 2500VAC opto-isolation, between input and output. Encapsulation, thermally conductive epoxy.

## PRECAUTIONS

1. Soldering must be completed within 10 seconds at 260 ˚C or less or within 5 seconds at 350 ˚C or less.
2. The SSR case serves to dissipate heat. Install the relays so that they are adequately ventilated.If poor ventilation is unavoidable, reduce the load current by half.
3. The input circuitry does not incorporporate a circuit protecting the SSR from being damaged due to a reversed connection.
4. Make sure that the polarity is correct when connecting the input lines.
5. When using the HFS5 series for an AC load with a peak voltage of more than 450V,connect the load terminals of the relay to an inrush absorber(varistor).The recommended varistor voltage is 470V.
6. The HFS5 series is not internally connected to a snubber circuit that absorb noise.Make sure that a snubber circuit is connected to the relay's load terminals.
7. When using the HFS5 series in phase control applications,at a phase control angle close to 180 degrees the relay's input signal turn off at the trailing edge of the AC sine wave must be limited to end 200μs before AC zero cross as shown in bellow Figure .This assures that the relay has time to switch off. Shorter times may cause loss of control at the following half cycle.

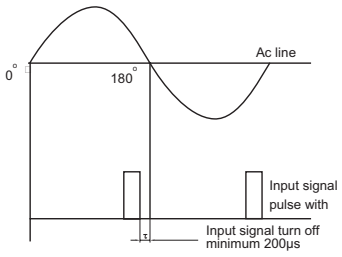

## ORDERING INFORMATION

| HFS5 / | 05 | D- | 0 | T | (XXX) |
|---|---|---|---|---|---|

**Type**

**Input voltage** **05**: 4 to 6V **12**: 9.6 to 14.4V **24**: 19.2 to 28.8V

**Input voltage form** **D**: DC

**Zero cross function** **0**: Zero cross turn-on **1**: Random turn-on

**Termination** **T**: T type (See the following)

**Customer special code**

## OUTLINE DIMENSIONS, WIRING DIAGRAM AND PC BOARD LAYOUT

Unit: mm

### Outline Dimensions

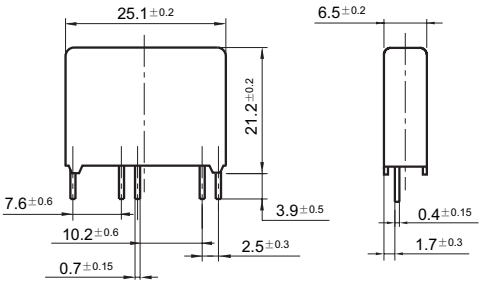


### PCB Layout

(Bottom view)

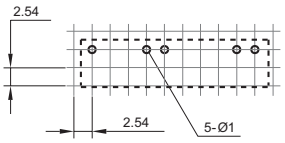


### Wiring Diagram

HFS5/□□D -□T

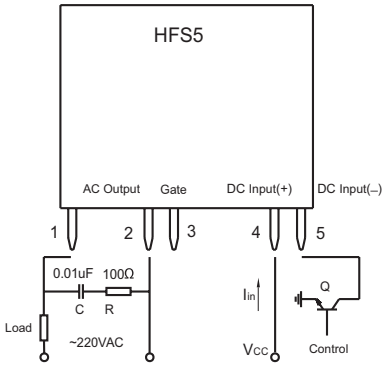


## CHARACTERISTIC CURVES

### Max. Load Current vs. Ambient Temperature

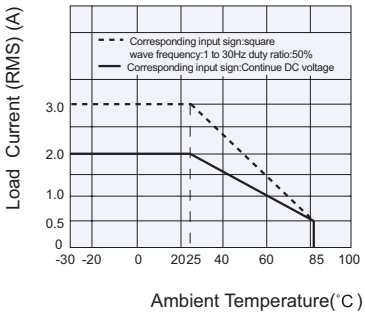


### Max. Permissible Non-repetitive Peak Surge Current vs. Continuance Time

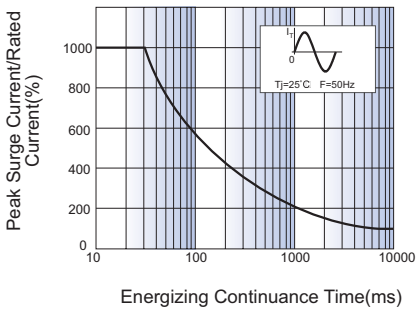


### Disclaimer

This datasheet is for the customers' reference. All the specifications are subject to change without notice.
We could not evaluate all the performance and all the parameters for every possible application. Thus the user should be in a right position to choose the suitable product for their own application. If there is any query, please contact Hongfa for the technical service. However, it is the user's responsibility to determine which product should be used only.

© Xiamen Hongfa Electroacoustic Co., Ltd. All rights of Hongfa are reserved.